BIMETAL THERMOMETER STANDARD

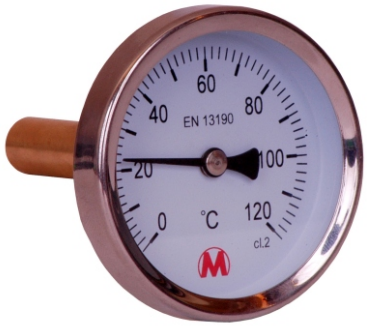

TR 63
TR 80
TR 100

Application:

Bimetal thermometer is certain for contact measurement of temperature of gaseous or liquid media.

Suitable for industry, heating, water supply, air-conditioning, pneumatics.

Technical parameters:

Construction:	EN 13 390
Nominal size	63, 80, 100 mm
Thermometer body	carbon steel
Lens	glass
Dial	white aluminium
Pointer	black aluminium
Scale	black print
Measure element	bimetal strip
Connection thread	G 1/2
Immersion and protection tube	grass
Diam. of immersion tube	7 mm
Lenght of immersion tube	50, 100, 160, 200, 400 mm
Temperature range	-30/50, 0/60, 0/120, 0/160, 0/200, 0/350, 0/400 °C
Connection	axial
Accuracy	class 2
Ambient temperature	-20/60°C
Protection	IP41
Options	another range another unit another connection
Notice	measuring part of thermometer (bimetal strip) must be immerse into measuring medium. Use thermometer with protection thermowell.

* marked execution on special request

MANOMER SK, a.s.
Hlavná 350
916 27 Častkovce
Slovak Republic
www.manomer.sk

Manomer SK

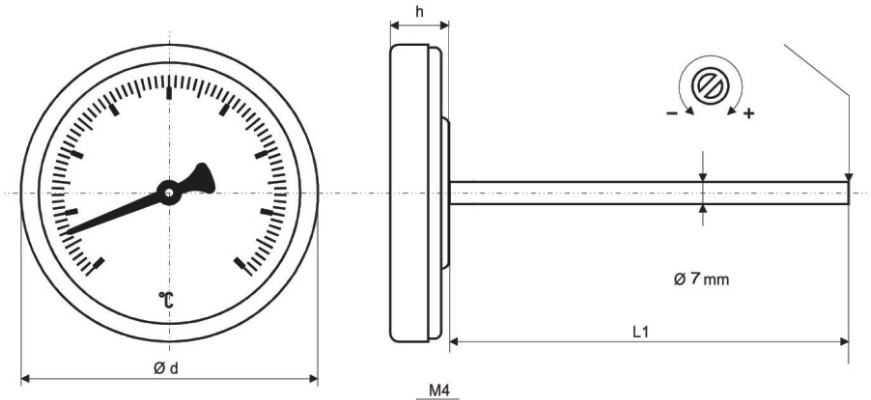

d	h
63	13
80	14
100	15

U1	L
43	50
55	63
102	111
143	156

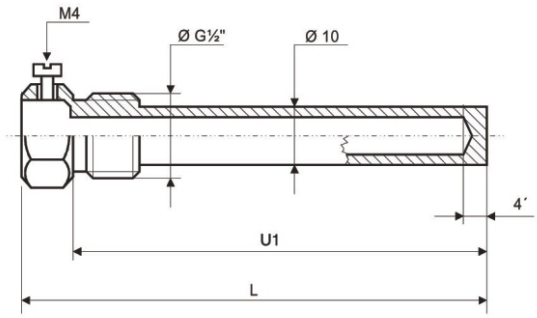

IDENTIFICATION:

type	dimension mm D	temperature range (°C)	lenght stem L1	connection
TR 63	63	-30/50, 0/60, 0/120, 0/150, 0/200, 0/350, 0/400	50, 100, 160, 200, 400	straight
TR 80	80			straight
TR 100	100			straight

MANOMER SK, a.s.
Hlavná 350
916 27 Častkovce
Slovak Republic
www.manomer.sk